Chateau LTE12

Chateau LTE12 (RBD53G-5HacD2HnD-TC&EG12-EA)

The Chateau is a home router to be used with a cellular network provider sim card.

Safety Warnings

Before you work on any equipment, be aware of the hazards involved with electrical circuitry, and be familiar with standard practices for preventing accidents.
Ultimate disposal of this product should be handled according to all national laws and regulations.
The Installation of the equipment must comply with local and national electrical codes.
This product is intended to be installed indoors. Keep this product away from water, fire, humidity, or hot environments.
Use only the power supply and accessories approved by the manufacturer, which can be found in the original packaging of this product.
Read the installation instructions before connecting the system to the power source.
We cannot guarantee that no accidents or damage will occur due to the improper use of the device. Please use this product with care and operate at your own risk!
In the case of device failure, please disconnect it from power. The fastest way to do so is by unplugging the power plug from the power outlet.
It is the customer's responsibility to follow local country regulations, including operation within legal frequency channels, output power, cabling requirements, and Dynamic Frequency Selection (DFS) requirements. All Mikrotik radio devices must be professionally installed.

Exposure to Radio Frequency Radiation: This MikroTik equipment complies with the European Union radiation exposure limits set forth for an uncontrolled environment. This MikroTik device should be installed and operated no closer than 20 centimeters from your body, occupational user, or the general public.

Quickstart

Please follow these quick steps to set up your device:

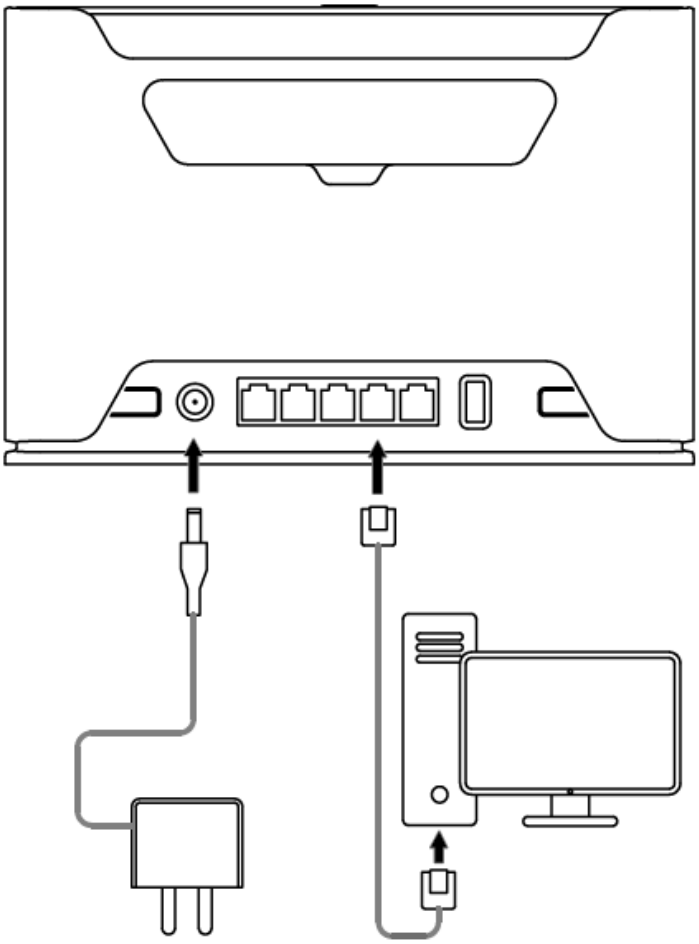

- Connect your computer to one of the Ethernet ports;
- Optional - Connect an external antenna to the SMA connector (The antennas are not provided in the package, see "Antenna usage");
- Insert micro SIM card into the slot located under the device;

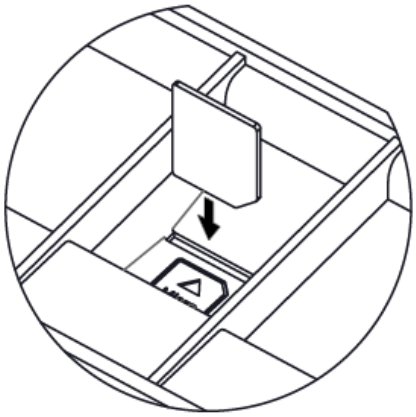

- Connect the power adapter to the DC jack;
- Once the device is powered on and the PC connected to the device, open http://192.168.88.1 in your web browser to start the configuration;
- User name: a*dmin* and there is no password by default you will be logged in automatically to the Quick Set screen (or, for some models, check user and wireless passwords on the sticker);
- We recommend clicking the "Check for updates" button on the right side and updating your RouterOS software to the latest version to ensure the best performance and stability, Must have a valid SIM card inserted;
- To manually update the device, please go to https://mikrotik.com/download
- Choose ARM packages for this device and download it to your PC.

- Upload downloaded packages to the WebFig "Files" menu and reboot the device.
- Updating your RouterOS software to the latest version will ensure the best performance, stability, and security updates.
- To personalize your wireless network, SSID can be changed in the fields "Network Name";
- Choose your country on the left side of the screen in the field "Country", to apply country regulation settings;
- Set up your wireless network password in the field "WiFi Password" the password must be at least eight symbols;
- Set up your router password in the bottom field "Password" to the right and repeat it in the field "Confirm Password", it will be used to log in next time;
- Click on the "Apply Configuration" to save changes.

Connecting with a mobile app

Use your smartphone to access your router through WiFi.

- Insert the SIM card and power on the device.
- Scan the QR code with your smartphone and choose your preferred OS.
- Connect to the wireless network. SSID starts with MikroTik and has the last digits of the device's MAC address.
- Open application.
- By default, the IP address and user name will be already entered.
- Click Connect to establish a connection to your device through a wireless network.
- Choose Quick setup and the application will guide you through all basic configuration settings in a couple of easy steps.
- An advanced menu is available to fully configure all necessary settings.

Expansion slots and ports

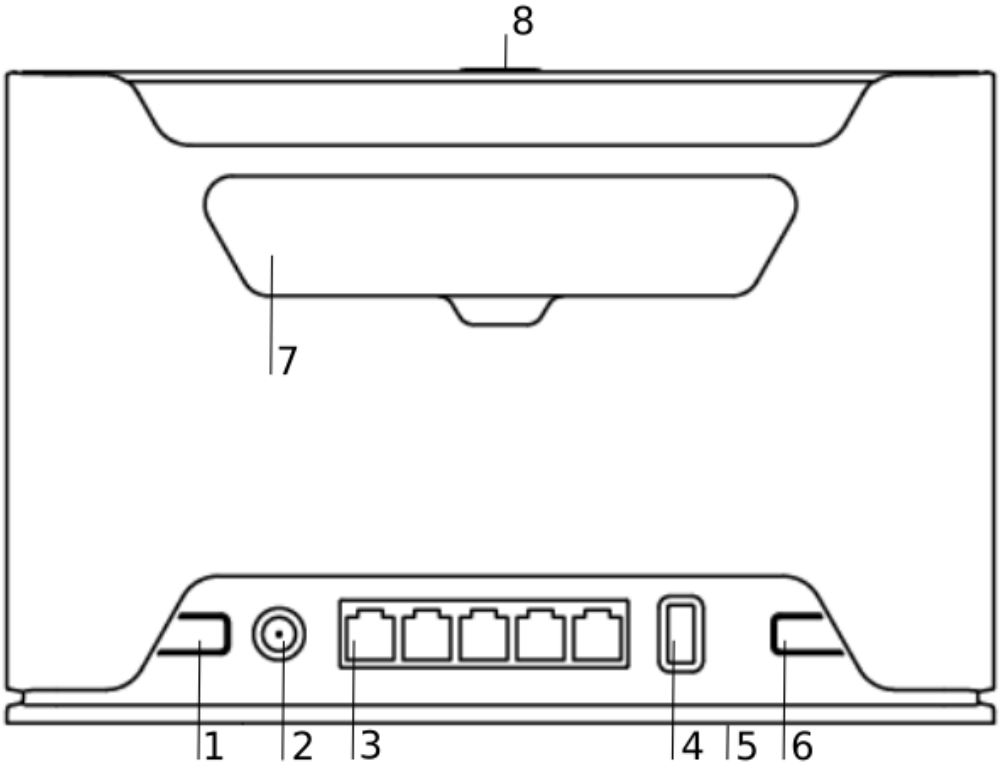

1. Reset button.
2. Powering DC jack 2.0 mm.

3. Five Gigabit ports, supporting automatic cross/straight cable correction (Auto MDI/X). Either straight or crossover cables can be used for connecting to other network devices.
4. USB type-A.
5. SIM slot for Micro sim card.
6. Mode button.
7. Cover for external SMA antenna connectors.
8. WPS Sync button.

- Integrated Wireless module operating at 2.4 GHz, 802.11b/g/n protocol.
- Integrated Wireless module operating at 5 GHz, 802.11a/n/ac protocol.

Mounting

The device is designed to be used indoors, by placing it on the desktop.

> We recommend using CAT5 shielded cable. When using and installing this device please pay attention to the Maximum Permissible Exposure (MPE) safety distance with a minimum of 20 cm between the radiator and your body.

Powering

The device accepts power from an adapter:

- Direct-input power jack (5.5 mm outside and 2 mm inside, female, pin-positive plug) 12-28 V DC.

The power consumption under maximum load can reach 17 W, with attachments 23 W.

Configuration

We recommend checking for updates frequently to receive the latest updates for your RouterOS software to ensure the best performance and stability. RouterOS includes many configuration options in addition to what is described in this document. We suggest starting here to get yourself accustomed to the possibilities: https://mt.lv/help. In case IP connection is not available, the Winbox tool (https://mt.lv/winbox) can be used to connect to the MAC address of the device from the LAN side (all access is blocked from the Internet port by default).
For recovery purposes, it is possible to boot the device for reinstallation, see section Buttons and Jumpers.

Mode button

Mode button is located on the back of the unit, to the right side (see "Expansion slots and ports")
The Default configuration for the Mode button is dark mode - to turn off all LEDs. The button can be configured in RouterOS to run any user-specified scripts.

Sync button

The sync button is located on the top of the unit. The WPS Sync button, if configured on the wireless interface, can be used to connect new clients.

- Press and hold the WPS button for 1 – 5 seconds to enable WPS for wireless interfaces.

Front LED status

1. Wireless network activity.
2. Ethernet port activity.
3. System LED with alternate mode for cellular modem status indication.
4. Modem signal strength indicators.

System LED alternate modem mode indications

When cellular modem interface is enabled, System LED have have alternate indications:

blinking red - SIM card not inserted

yellow - established connection in 3G mode

blue - established connection in LTE mode

blinking - connection establishment in progress, modem registered in cellular network, APN is not activated yet

SIM slot usage

SIM card slot is designed to be used with Micro SIM cards.
Nano SIM cards have different thickness, and usage with an adapter are not recommended.

Reset button

The reset button has three functions:

- Hold this button during boot time until the LED light starts flashing, and release the button to reset the RouterOS configuration (total 5 seconds).
- Keep holding for 5 more seconds, LED turns solid, release now to turn on CAP mode. The device will now look for a CAPsMAN server (total of 10 seconds).
- Or Keep holding the button for 5 more seconds until the LED turns off, then release it to make the RouterBOARD look for Netinstall servers (total 15 seconds).

Regardless of the above option used, the system will load the backup RouterBOOT loader if the button is pressed before power is applied to the device. Useful for RouterBOOT debugging and recovery.

> **Netinstall**
>
> When performing Netinstall, make sure to use the latest v7 version of both ROS files and the Netinstall software.

Accessories

The package includes the following accessories that come with the device:

- EU/US Switching Power Supply 24 V , 1.2 A, 28.8 W, 86.8 %, VI, cable:150 cm.
- CAT5E UTP Flat Cable, 8P8C, AWG32, 1.5 m, white color.

LTE Antenna usage

SMA connectors are for LTE antennas.

The device has two external antenna connectors on the back behind the doors.

- Open doors by pulling them upwards.
- Screw the LTE antenna to the SMA connector located on the left side. The maximum diameter for antenna connectors or any other adapters used is 13 mm.

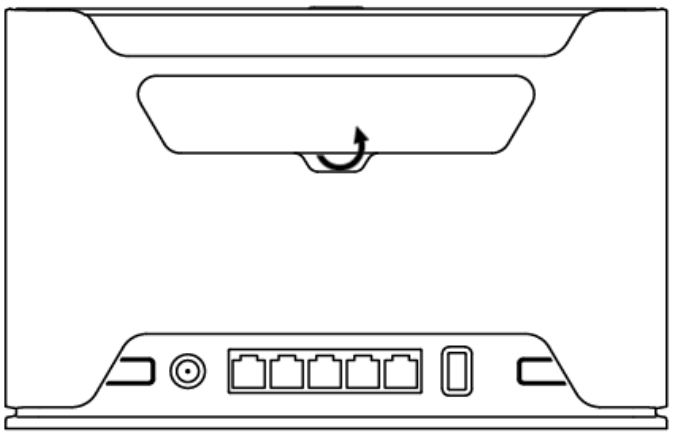

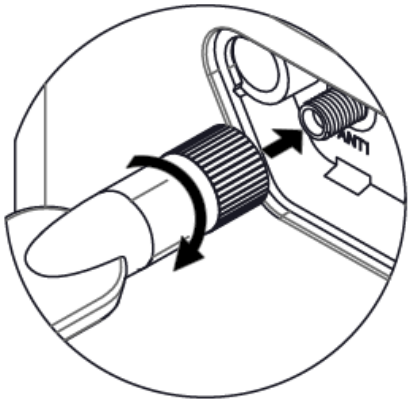

When using one antenna, please connect to the SMA connector on the left side (ANT1).
Only when using two antennas, you can connect to the right SMA connector (ANT4).

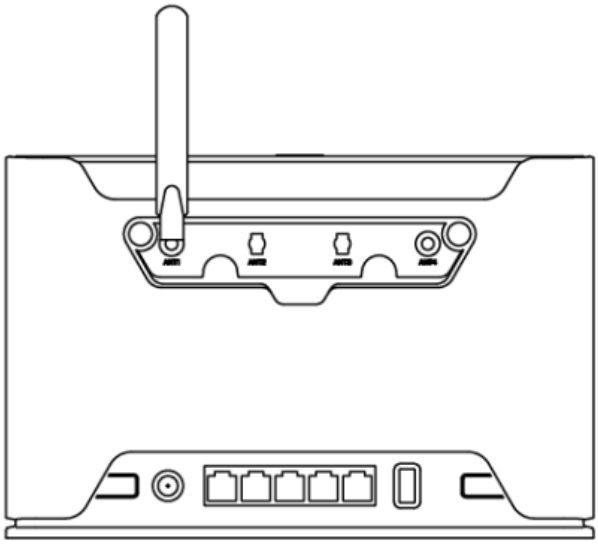

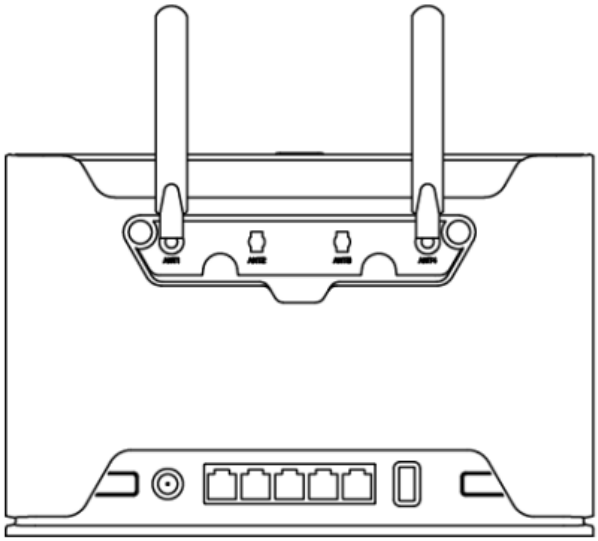

Please connect and disconnect the antenna, when the device is turned off!
SMA connectors on the device are female.

We recommend using our antenna https://mikrotik.com/product/mant_lte_5o

Removing front cover to access PCB

In case there is a need to access PCB, the front cover can be removed.

- Remove center screw;

- Use a small screwdriver to pry open cover in marked spots;
- Continue to pry it open by going up;

- At the end lift off the whole cover.

Operating system support

The device supports RouterOS software version v7. The specific factory-installed version number is indicated in the RouterOS menu /system resource. Other operating systems have not been tested.

> ⚠ To avoid pollution of the environment, please separate the device from household waste and dispose of it in a safe manner, such as at designated waste disposal sites. Familiarize yourself with the procedures for the proper transportation of the equipment to the designated disposal sites in your area.

UKCA marking

Eurasian Conformity Mark

Частотный диапазон	Мощность передатчика
2400-2483.5 МГц, 5150-5350 МГц, 5650-5850 МГц	≤100 мВт

*Доступные частотные каналы могут различаться в зависимости от модели продукта и сертификации.

Информация о дате изготовления устройства указана в конце серийного номера на его наклейке через дробь. Первая цифра означает номер года (последняя цифра года), две последующие означают номер недели.

Изготовитель: Mikrotikls SIA, Aizkraukles iela 23, Riga, LV-1006, Латвия, support@mikrotik.com. Сделано в Китае, Латвии или Литве. См. на упаковке.

Для получения подробных сведений о гарантийном обслуживании обратитесь к продавцу. Информация об импортерах продукции MikroTik в Российскую Федерацию: https://mikrotik.com/buy/europe/russia

Продукты MikroTik, которые поставляются в Евразийский таможенный союз, оцениваются с учетом соответствующих требований и помечены знаком EAC, как показано ниже:

Norma Oficial Mexicana

Rango de frecuencia (potencia de salida máxima): 2400-2483.5 MHz (30 dBm), 5725-5850 MHz (30 dBm). Los canales de frecuencia disponibles pueden variar según el modelo y la certificación del producto.

EFICIENCIA ENERGETICA CUMPLE CON LA NOM-029-ENER-2017.

La operacion de este equipo esta sujeta a las siguientes dos condiciones:

- Es posible que este equipo o dispositivo no cause interferencia perjudicial y.
- Este equipo debe aceptar cualquier interferencia, incluyendo la que pueda causar su operacion no deseada.

Fabricante: Mikrotikls SIA, Brivibas gatve 214i, Riga, LV-1039, Latvia.

País De Origen: Letonia; Lituania; China (Republica Popular); Estados Unidos De America; Mexico.

Por favor contacte a su distribuidor local para preguntas regionales específicas. La lista de importadores se puede encontrar en nuestra página de inicio – https://mikrotik.com/buy/latinamerica/mexico.

The National Commission for the State Regulation of Communications and Informatization by Ukraine

Виробник: Mikrotikls SIA, Brivibas gatve 214i Рига, Латвія, LV1039.

Робоча частота (Максимальна вихідна потужність): 2480-2483.5 МГц (20 дБм), 5150-5250 МГц (23 дБм), 5250-5350 МГц (20 дБм), 5470-5725 МГц (27 дБм).

Справжнім Mikrotikls SIA заявляє, що маршрутизатор відповідає основним вимогам та іншим відповідним положенням директиви 2014 /53/ЕС, а також суттєвим вимогам Технічного регламенту радіообладнання, затвердженого постановою Кабінету Міністрів України від 24 травня 2017 року № 355.

Для експлуатації в Україні необхідно отримати дозвіл на експлуатацію у порядку, затвердженому рішенням НКРЗІ від 01.11.2012 № 559, зареєстрованому в Міністерстві юстиції України 03.01.2013 за № 57/22589.

CE Declaration of Conformity

Manufacturer: Mikrotikls SIA, Brivibas gatve 214i Riga, Latvia, LV1039.

Hereby, Mikrotīkls SIA declares that the radio equipment type RBD53G-5HacD2HnD-TC&EG12-EA is in compliance with Directive 2014/53/EU. The full text of the EU declaration of conformity is available at the following internet address: https://mikrotik.com/products

WLAN / WCDMA / LTE

Operating Frequency / Maximum output power	WLAN 2.4 Ghz	2400-2483.5 MHz / 20 dBm
	WLAN 5Ghz	5150-5250 MHz / 23 dBm
	WLAN 5Ghz	5250-5350 MHz / 20 dBm
	WLAN 5Ghz	5470-5725 MHz / 27 dBm
Betriebsfrequenz / maximale Ausgangsleistung	WCDMA Band I	1922.4 MHz / 24dB ± 2.7 dB
	WCDMA Band III	1712.4 MHz / 24dB ± 2.7 dB
	WCDMA Band V	826.4 MHz / 24dB ± 2.7 dB
Fréquence de fonctionnement / puissance de sortie maximale	WCDMA Band VIII	882.4 MHz / 24dB ± 2.7 dB
Frequenza operativa / massima potenza di uscita	LTE Band 1	2100 MHz / 23dB ± 2.7 dB
	LTE Band 3	1700 MHz / 23dB ± 2.7 dB
	LTE Band 5	850 MHz / 23dB ± 2.7 dB
Frecuencia de funcionamiento / potencia de salida máxima	LTE Band 7	2600 MHz / 23dB ± 2.7 dB
	LTE Band 8	900 MHz / 23dB ± 2.7 dB
Рабочая частота / максимальная выходная мощность	LTE Band 20	800 MHz / 23dB ± 2.7 dB
	LTE Band 28	700 MHz / 23dB ± 2.7 dB
	LTE Band 38	2600 MHz / 23dB ± 2.7 dB
	LTE Band 40	2300 MHz / 23dB ± 2.7 dB

This MikroTik device meets Maximum WLAN and LTE transmit power limits per ETSI regulations. For more detailed information see Declaration of Conformity above / Dieses MikroTik-Gerät erfüllt die maximalen WLAN- und LTE-Sendeleistung Grenzwerte gemäß ETSI-Bestimmungen. Weitere Informationen finden Sie oben unter Konformitätserklärung / Cet appareil MikroTik respecte les limites maximales de puissance de transmission WLAN et LTE conformément aux réglementations ETSI. Pour plus d'informations, voir la déclaration de conformité ci-dessus / Questo dispositivo MikroTik è conforme ai limiti massimi di potenza di trasmissione WLAN e LTE in conformità con le normative ETSI. Per ulteriori informazioni, consultare la dichiarazione di conformità sopra / Este dispositivo MikroTik cumple con los límites máximos de potencia de transmisión WLAN y LTE de acuerdo con las regulaciones ETSI. Para obtener más información, consulte la declaración de conformidad anterior / Это устройство MikroTik соответствует максимальным пределам мощности передачи WLAN и LTE в соответствии с правилами ETSI. Для получения дополнительной информации см. Декларацию соответствия выше.

The WLAN function for this device is restricted to indoor use only when operating in the 5150 to 5350 MHz frequency range. / Die WLAN-Funktion dieses Geräts ist nur für die Verwendung in Innenräumen im Frequenzbereich 5150 bis 5350 MHz beschränkt. / La fonction WLAN de cet appareil est limitée à une utilisation en intérieur uniquement lorsqu'il fonctionne dans la gamme de fréquences 5150 à 5350 MHz. / La funzione WLAN per questo dispositivo è limitata all'uso interno solo quando si opera nella gamma di frequenza da 5150 a 5350 MHz. / La función WLAN para este dispositivo está restringida al uso en interiores solo cuando se opera en el rango de frecuencia de 5150 a 5350 MHz. / Функция WLAN для этого устройства ограничена использованием внутри помещения только при работе в диапазоне частот от 5150 до 5350 МГц.

Note. The information contained here is subject to change. Please visit the product page on www.mikrotik.com for the most up to date version of this document.