CSS326-24G-2S+RM

CSS326-24G-2S+RM

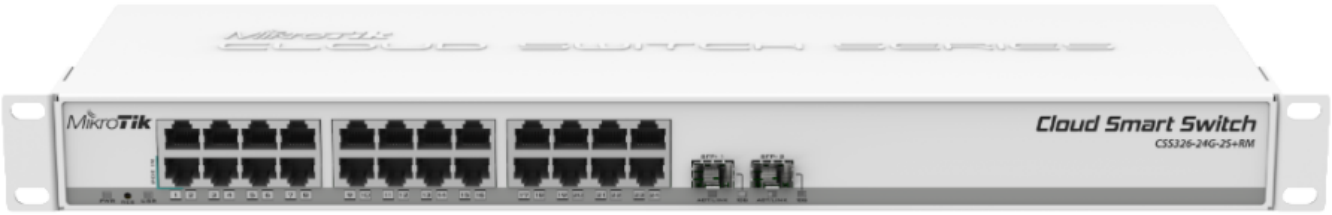

The CSS is a switch with 24 Gigabit Ethernet ports and two SFP+ ports. All ports are connected through a switch chip. The device runs SwOS operating system, specifically made for Switches.

Safety Warnings

Before you work on any equipment, be aware of the hazards involved with electrical circuitry, and be familiar with standard practices for preventing accidents.
Ultimate disposal of this product should be handled according to all national laws and regulations.
The Installation of the equipment must comply with local and national electrical codes.
This unit is intended to be installed in the rackmount. Please read the mounting instructions carefully before beginning installation. Failure to use the correct hardware or to follow the correct procedures could result in a hazardous situation to people and damage to the system.
This product is intended to be installed indoors. Keep this product away from water, fire, humidity or hot environments.
Use only the power supply and accessories approved by the manufacturer, and which can be found in the original packaging of this product.
Read the installation instructions before connecting the system to the power source.
We cannot guarantee that no accidents or damage will occur due to the improper use of the device. Please use this product with care and operate at your own risk!
In the case of device failure, please disconnect it from power. The fastest way to do so is by unplugging the power plug from the power outlet.
It is the customer's responsibility to follow local country regulations, including operation within legal frequency channels, output power, cabling requirements, and Dynamic Frequency Selection (DFS) requirements. All Mikrotik devices must be professionally installed.

Quick start

- Install the device into the rackmount (see "Mounting").
- Connect your managed devices.
- Connect the power source.
- In your computer, set the IP address to static: 192.168.88.2/24
- Open your web browser and enter the IP address of your Switch (192.168.88.1 by default) and the login screen will appear. https://wiki.mikrotik.com/wiki/SwOS/CSS326#Connecting_to_the_Switch
- User name admin and no password, (or, for some models, check user and wireless passwords on the sticker)
- We recommend clicking the "Check for updates" button and updating your software to the latest version to ensure the best performance and stability.
- Set up your password to secure the device.

Powering

The device accepts power from the power jack or from the first Ethernet port (Passive PoE).

- Direct-input power jack (5.5mm outside and 2mm inside, female, pin positive plug) accepts 11-30V DC.
- The first Ethernet port accepts passive PoE input 11-30V DC.
- Power consumption 19 W.

Connecting to a PoE Adapter:

1. Connect the Ethernet cable from the device to the PoE+DATA port of the PoE adapter.
2. Connect an Ethernet cable from your local network (LAN) to the PoE adapter.

3. Connect the power cord to the adapter, and then plug the power cord into a power outlet.

Extension slots and ports

- 24 individual Gigabit Ethernet ports, supporting automatic cross/straight cable connection (Auto MDI/X), so you can use either straight or cross-over cables for connecting to other network devices.
- 2 SFP+ ports for using 10G SFP+, 1.25G Optical fiber or copper Ethernet modules

Specifications

Please visit wiki pages for MikroTik SFP module compatibility table: https://wiki.mikrotik.com/wiki/MikroTik_SFP_module_compatibility_table

Mounting

The device is designed to use indoors and it can be mounted in a rackmount enclosure using provided rack mounts, or it can be placed on the desktop. Use a Phillips screwdriver to attach rackmount ears on both sides of the device if designated use is for rackmount enclosure:

- Attach rack ears to both sides of the device and tighten four screws to secure them in place, as shown in the picture.

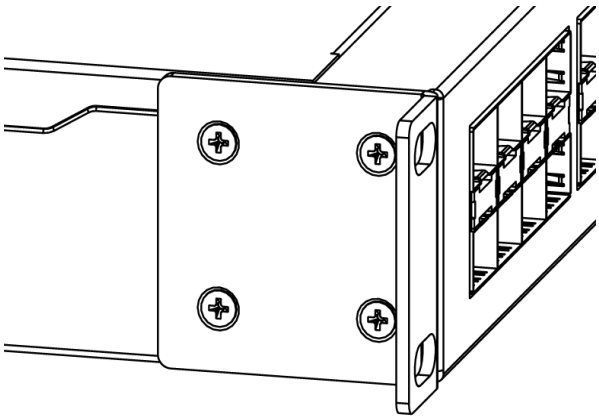

- Place the device in a rackmount enclosure and align with the holes so that the device fits conveniently.
- Tighten screws to secure it in place.

The IP rating scale for this device is IPX0. The device has no protection from water contamination, please ensure the placement of the device in a dry and ventilated environment.
Mounting and configuration of this device should be done by a qualified person. We recommend using Cat6 cables for our devices.

Reset button

Hold this button during boot time until LED light starts to flash. Release the button to reset SwOS configuration and load backup software for reinstallation and upgrade.

Operating system support

This device runs SwOS, which is the only supported OS for this device. Information about SwOS: https://wiki.mikrotik.com/wiki/SwOS/CSS326

⚠ To avoid pollution of the environment, please separate the device from household waste and dispose of it in a safe manner, such as in designated waste disposal sites. Familiarize yourself with the procedures for the proper transportation of the equipment to the designated disposal sites in your area.

Federal Communication Commission Interference Statement

This equipment has been tested and found to comply with the limits for a Class B digital device, pursuant to Part 15 of the FCC Rules. These limits are designed to provide reasonable protection against harmful interference in a residential installation.
This equipment generates, uses and can radiate radio frequency energy and, if not installed and used in accordance with the instructions, may cause harmful interference to radio communications. However, there is no guarantee that interference will not occur in a particular installation. If this equipment does cause harmful interference to radio or television reception, which can be determined by turning the equipment off and on, the user is encouraged to try to correct the interference by one of the following measures:

- Reorient or relocate the receiving antenna.
- Increase the separation between the equipment and receiver.
- Connect the equipment into an outlet on a circuit different from that to which the receiver is connected.
- Consult the dealer or an experienced radio/TV technician for help.

FCC Caution: Any changes or modifications not expressly approved by the party responsible for compliance could void the user's authority to operate this equipment.
This device complies with Part 15 of the FCC Rules. Operation is subject to the following two conditions: (1) This device may not cause harmful interference, and (2) this device must accept any interference received, including interference that may cause undesired operation.
Note: This unit was tested with shielded cables on the peripheral devices. Shielded cables must be used with the unit to ensure compliance.

Industry Canada

This device complies with Industry Canada's licence-exempt RSS standard(s). Operation is subject to the following two conditions: (1) this device may not cause interference, and (2) this device must accept any interference, including interference that may cause undesired operation of the device.

Le présent appareil est conforme aux CNR d'Industrie Canada applicables aux appareils radio exempts de licence. L'exploitation est autorisée aux deux conditions suivantes: (1) l'appareil ne doit pas produire de brouillage, et (2) l'utilisateur de l'appareil doit accepter tout brouillage radioélectrique subi, même si le brouillage est susceptible d'en compromettre le fonctionnement.

This Class B digital apparatus complies with Canadian ICES-003.

Cet appareil numérique de la classe [B] est conforme à la norme NMB-003 du Canada.

CAN ICES-003 (B) / NMB-003 (B)

UKCA marking

Eurasian Conformity Mark

Информация о дате изготовления устройства указана в конце серийного номера на его наклейке через дробь. Первая цифра означает номер года (последняя цифра года), две последующие означают номер недели.

Изготовитель: Mikrotikls SIA, Aizkraukles iela 23, Riga, LV-1006, Латвия, support@mikrotik.com. Сделано в Китае, Латвии или Литве. См. на упаковке.

Для получения подробных сведений о гарантийном обслуживании обратитесь к продавцу. Информация об импортерах продукции MikroTik в Российскую Федерацию: https://mikrotik.com/buy/europe/russia

Продукты MikroTik, которые поставляются в Евразийский таможенный союз, оцениваются с учетом соответствующих требований и помечены знаком EAC, как показано ниже:

Norma Oficial Mexicana

EFICIENCIA ENERGETICA CUMPLE CON LA NOM-029-ENER-2017.

La operacion de este equipo esta sujeta a las siguientes dos condiciones:

- Es posible que este equipo o dispositivo no cause interferencia perjudicial y.
- Este equipo debe aceptar cualquier interferencia, incluyendo la que pueda causar su operacion no deseada.

Fabricante: Mikrotikls SIA, Brivibas gatve 214i, Riga, LV-1039, Latvia.

País De Origen: Letonia; Lituania; China (Republica Popular); Estados Unidos De America; Mexico.

Por favor contacte a su distribuidor local para preguntas regionales específicas. La lista de importadores se puede encontrar en nuestra página de inicio – https://mikrotik.com/buy/latinamerica/mexico.

CE Declaration of Conformity

Manufacturer: Mikrotikls SIA, Brivibas gatve 214i Riga, Latvia, LV1039.

The full text of the EU Declaration of Conformity is available at the following internet address: https://mikrotik.com/products

Information contained here is subject to change. Please visit the product page on www.mikrotik.com for the most up to date version of this document.